Backplane Systems Technology Pty Ltd
TEL 02 9457 6400
sales@backplane.com.au
www.backplane.com.au

Winmate M-Series HMI Panel PC

12" M-Series HMI with Intel® Core™ i5-7200U

R12IKWS-MHM2

Features:

- Signature true flat display screen with edge-to-edge design
- Aluminum, anti-corrosion treated housing
- Superior Sealing with front IP65 protection against dust and water
- Projected Capacitive P-CAP Multi-Touch Screen
- Fanless Design
- Support wide range 9-29V isolation DC input
- One Quick & Easy Removable 2.5" SSD Bay Slot
- Support PCIe x4 Card

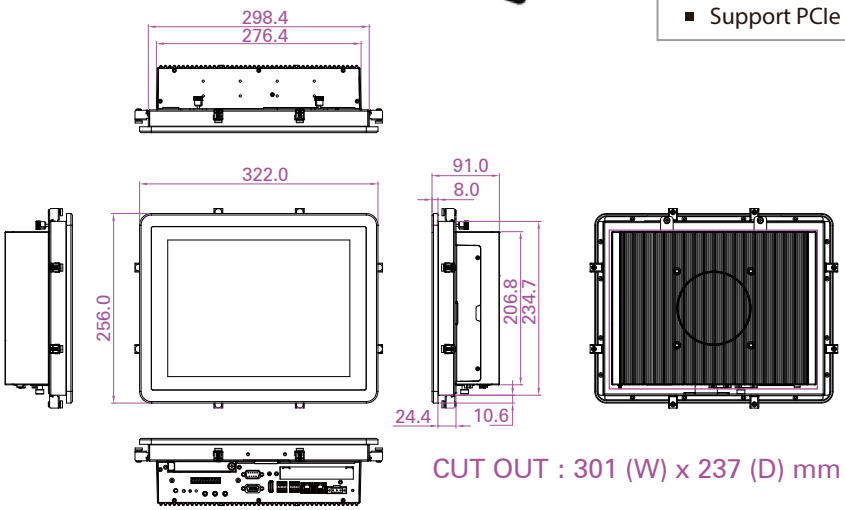

CUT OUT : 301 (W) x 237 (D) mm

Measurements shown in mm
All Dimensions are ± 0.5 mm

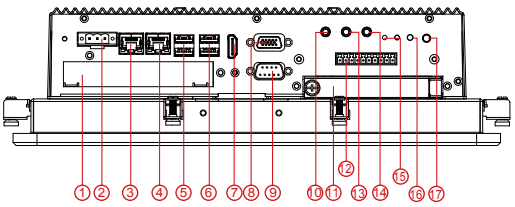

1. PCIe Slot cover for PCIe x 4 (1 x Half-Length PCIe card)
2. 9-29V isolation DC-in
3. Giga LAN
4. Giga LAN
5. USB 3.0 x 2
6. USB 3.0 x 2
7. HDMI
8. VGA
9. RS232/422/485
10. Mic in
11. 2.5" SSD Slot x 1
12. 8 x Isolated DIDO (Optional)
13. Line in
14. Line out
15. LED
16. Reset
17. Power Button

* Note: this is a simplified drawing and some components are not marked in detail. Please contact our sales representative if you need further product information.

System Specification

Processor	: Intel® Core i5-7200U Kaby Lake 2.5GHz (turbo to 3.1GHz)
BIOS	: Insyde BIOS
System Memory	: DDR4-2133 SO-DIMM (Max 16GB)
System Chipset	: Intel® SoC Integrated
Graphic Chipset	: Intel® HD Graphics 620
Ethernet Compatible	: 1000 Base-Tx Gigabit Ethernet Compatible
Audio	: Realtek ALC283 HD Audio Codec
Expansion Slot	: PCIe x 4
Main Storage	: 2.5" 64GB SSD (Options up to 512GB)
Second Storage (Optional)	: mSATA 64GB (Options up to 512GB)
Touch screen	: Projected Capacitive
Operating System (Optional)	: Windows 10 IoT Enterprise

Display Specification

Display Size	: 12"
Active Display Area	: 245.76 (H) x 184.32(V)
Pixel Pitch	: 0.240(H) x 0.240(V)
Display Color	: 262k/16.2M
Resolution	: 1024 x 768
Brightness	: 500 nits
Contrast Ratio	: 1000:1 (Typ.)
Viewing Angle	: 89/89/89/89

Mechanical Specification

Mounting	: Wall Mount / VESA Mount
Dimension	: 322 (L) x 256 (W) x 91 (H)

Power Supply

Power Input	: 9-29V isolation DC in with protection Fuse
Power Adapter	: 110-240AC to 12V DC out 80W power Adapter

Environmental Specification

Operation Temperature	: 0~ 50˚C
Operating Humidity	: 30%-95% at 40˚C (non-condensing, RH)
Water Proof	: Front: IP65; Rear: IP20 / Fanless

I/O Connectors

I/O Connectors : 9-29V isolation DC in x 1 (Terminal Block 3pin)
Gigabit LAN x 2
USB3.0 x 4
HDMI Output x 1
D-Sub15 (VGA) Output x 1
RS232/422/485 selectable serial port x 1
Audio in Jack x 1
Audio out Jack x 1
Reset key x 1
Power Button x 1
2.5" SSD indicators x 1
Isolated DIDO x 8, 4 In / 4 Out (Optional)

Accessories

- Mounting clips & screws
- 12V 80W power adapter
- Power cord
- Driver CD